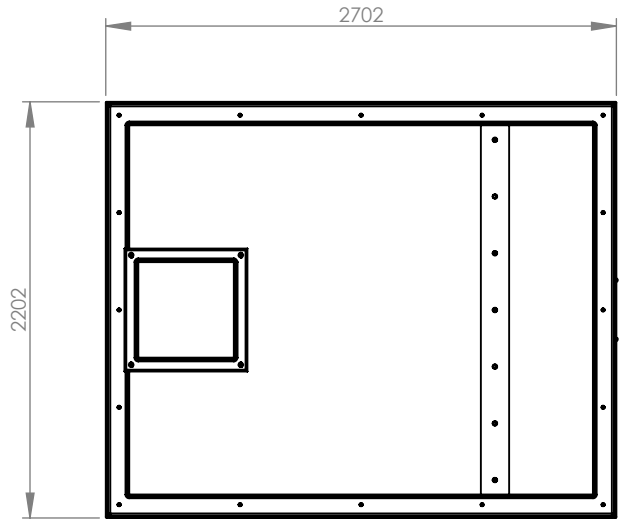

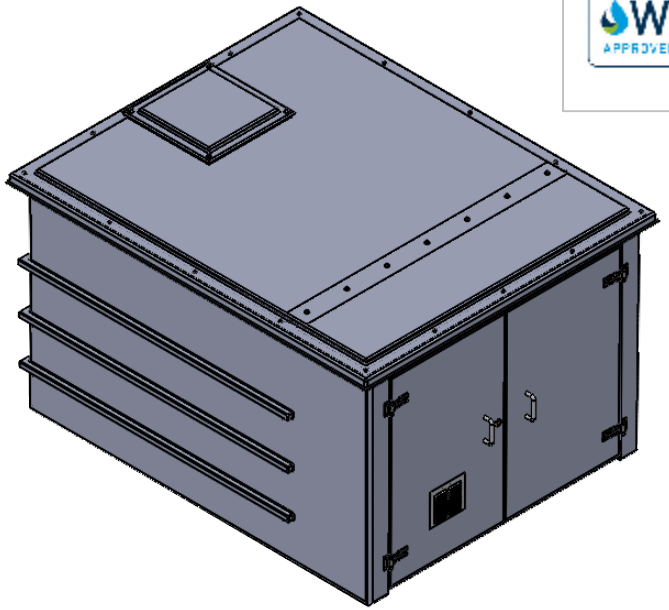

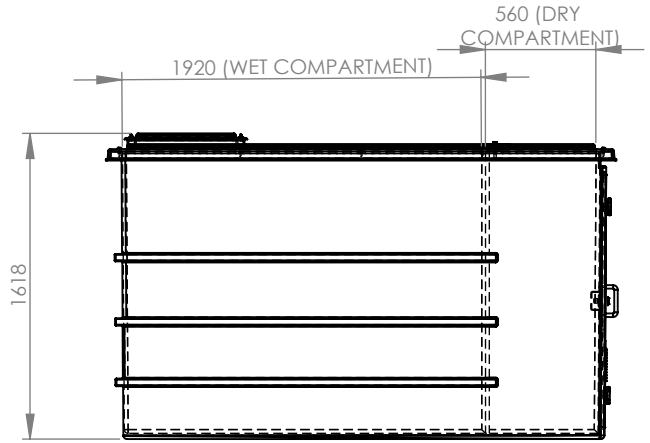

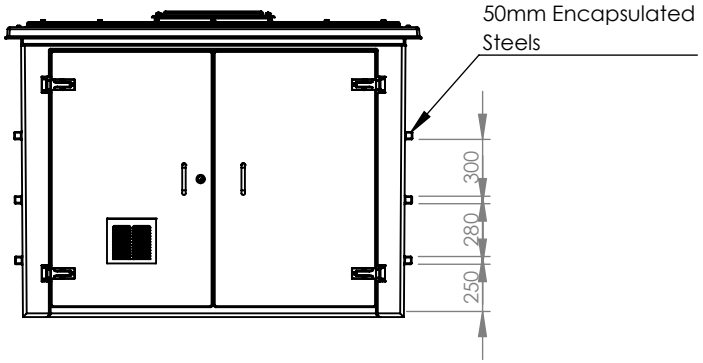

TITLE AQUACUBE.7500-5760.UN	NOTE: All tanks must be fully supported on a flat,level & continuous foundation providing structural support to the tank when full to maximum operating capacity.It is essential that the user refers to the conditions of installation document prior to the installation of the tank.Under no circumstances should the tank body be used to provide support to pipework and ancillary items. The tank lid is a structural part of the tank and must be in place and fitted correctly when water is contained within the tank.	DESCRIPTION: CUCOMP.7500-5760.UN Combination Unit c/w double access door and access manway to wet compartment	DATE	VERSION	NOTES	TANK SPECIFICATION :	
DRAWN BY J. Ellison	DATE 16/10/2023		16/10/2023	A	FIRST ISSUE	WET COMPARTMENT	1920 x 2000 x 1500mm
						DRY COMPARTMENT	560 x 2000 x 1500mm
						EXTERNAL DIMENSIONS	2702 x 2202 x 1618mm
						NOMINAL CAPACITY	5760 Litres
						INSULATION THICKNESS	NONE
CUSTOMER CUSTOMER	ALL DIMENSIONS+/- 5mm UNLESS OTHERWISE STATED	A4	ALL DIMENSIONS IN MM - DO NOT SCALE			MATERIAL	GRP
						SCALE:1:40	SHEET 1 OF 1