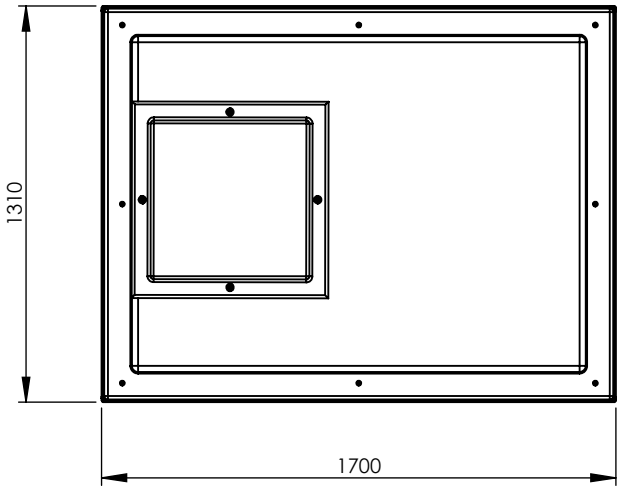

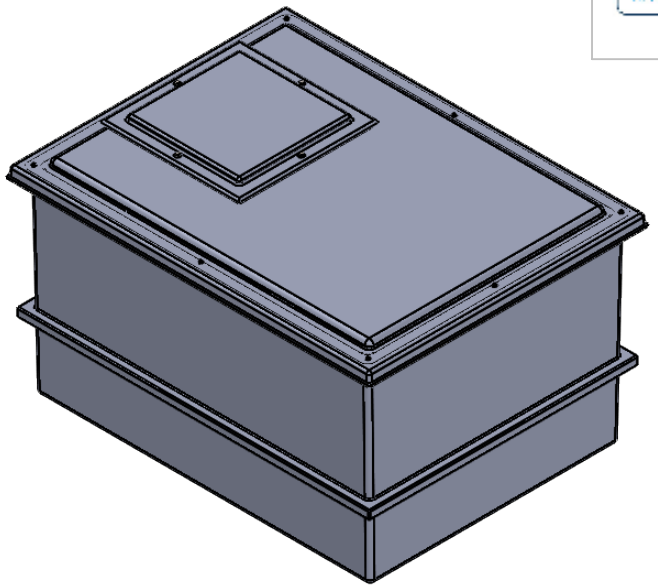

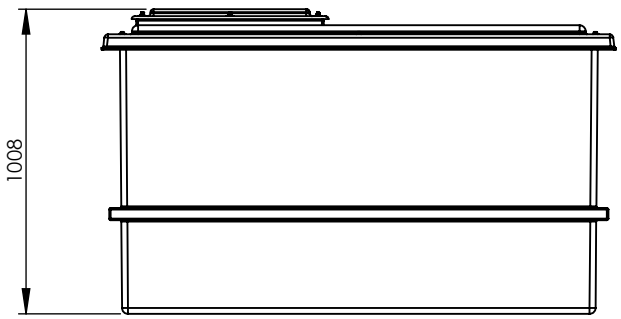

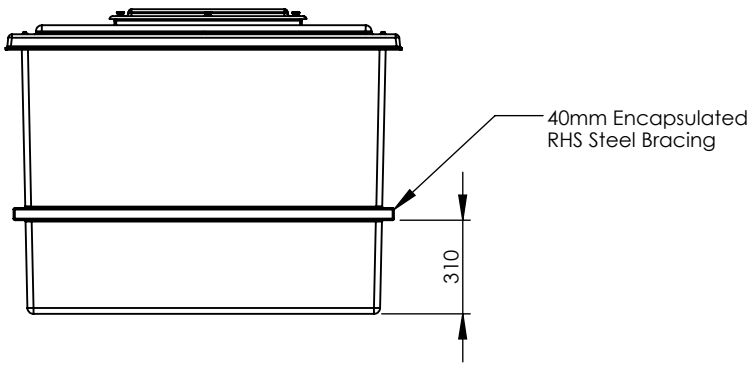

TITLE

PW1590.INS.AG

DRAWN BY C.MORRIS DATE 27/11/2017

CUSTOMER CUSTOMER

NOTE:
All Tanks Direct tanks must be fully supported on a flat,level & continuous foundation providing structural support to the tank when full to maximum operating capacity.It is essential that the user refers to the conditions of installation document prior to the installation of the tank.Under no circumstances should the tank body be used to provide support to pipework and ancillary items. The tank lid is a structural part of the tank and must be in place and fitted correctly when water is contained within the tank.

ALL DIMENSIONS+/- 5mm
UNLESS OTHERWISE STATED

A4

DESCRIPTION:
PW1590 one piece cold water storage tank suitable for AG/AF Air gaps

ALL DIMENSIONS IN MM - DO NOT SCALE

DATE	VERSION	NOTES
28/09/2017	A	FIRST ISSUE

TANK SPECIFICATION :

INTERNAL DIMENSIONS	1524 x 1143 x 915mm
EXTERNAL DIMENSIONS	1700 x 1310 x 1008mm
NOM. CAPACITY	1590 Litres
DRY WEIGHT	115 KG
INSULATION THICKNESS	25mm
WRAS CERT. NUMBER	1310072
MATERIAL	GRP

SCALE 1:25

SHEET 1 OF 1