250ltr Water Tank

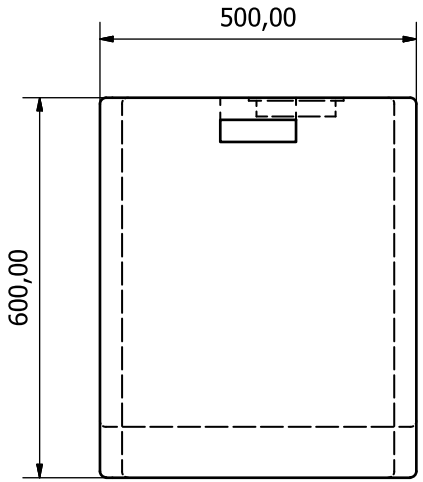

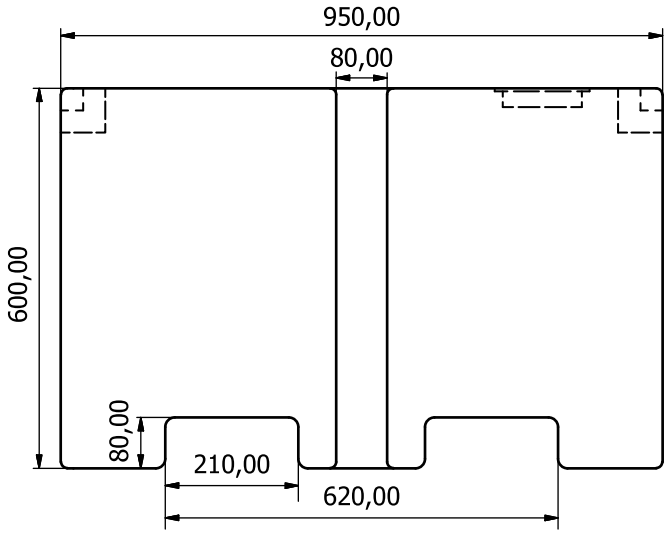

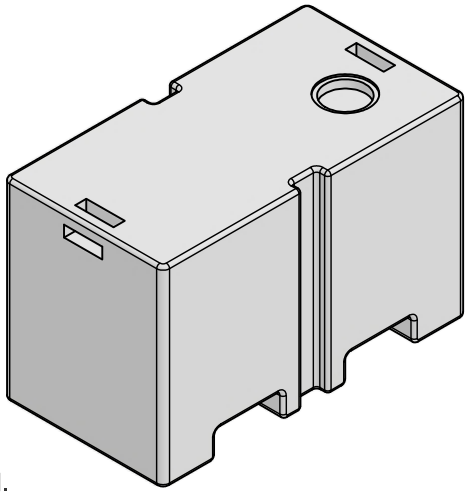

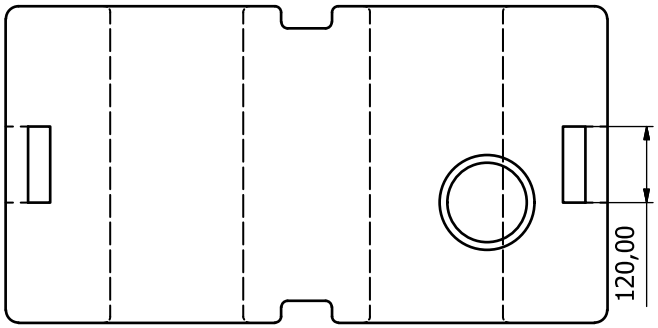

This drawing and the information thereon is the sole property of Tanks Direct Limited and shall not be copied or reproduced without the consent of Tanks Direct Limited.
dimensions are all in mm unless otherwise stated.
all tolerences +/- 1mm unless stated.

01643 703358
www.tanks-direct.co.uk
TanksDirectUK
TanksDirectUK